6. Solar X-Ray Imager

The Solar X-ray Imager (SXI), GFE manufactured by Lockheed Martin, is used to determine when to issue forecasts and alerts of "space weather" conditions that may interfere with ground and space systems. These conditions include ionospheric changes that affect radio communication (both ground-to-ground and satellite-to-ground) and magnetospheric variations that induce currents in electric power grids and long distance pipelines. These conditions can cause navigational errors in magnetic guidance systems, introduce changes in spacecraft charging, produce high energy particles that can cause single event upsets in satellite circuitry, and expose astronauts to increased radiation. The SXI will observe solar flares, solar active regions, coronal holes, and coronal mass ejections. Images from the SXI will be used by NOAA and U.S. Air Force forecasters to monitor solar conditions that affect space weather conditions, including the dynamic environment of energetic particles, solar wind streams, and coronal mass ejections emanating from the sun. These data can be used to issue forecasts of solar phenomena.

The SXI performs as part of the Space Environment Monitor (SEM) instruments and provides the means for obtaining the solar data required to:

- Locate coronal holes for prediction of high speed solar wind streams causing recurrent geomagnetic storms. These weakly emitting features accurately predict geomagnetic storms for the years near minimum solar activity when long lived holes are present on the sun.
- Locate the position of solar flares. Their locations, both on the disk and beyond the west limb, are used to forecast the magnitude of particle events.
- Monitor for changes indicating coronal mass ejections (CME) that may impact Earth and cause geomagnetic storms. Large-scale, long duration, possibly weakly emitting events, and brightening of coronal filament arcades are used as evidence of CMEs.
- Observe active region size morphology and complexity, and temperature and emissions measure, for flare forecasts.
- Monitor for active regions beyond the east limb that will be rotating onto the solar disk for solar activity forecasts.

Copyright © 2006 Boeing. Unpublished work – all rights reserved
Pursuant to Contract NAS5-98069

Other solar feature observations include flare properties, newly emerging active regions, X-ray bright points, and CME ejecta moving away from the sun at 1000 km/sec. To meet these objectives, the SXI images the solar corona in the soft X-ray to extreme ultraviolet (XUV to EUV) region of the electromagnetic spectrum. Full-disk solar images are provided with a 512 X 512 array with 5 arc second pixels in several wavelength bands from 6 to 60 Å (0.6 to 6 nm). A regular sequence of exposures that are downlinked at one-minute intervals is used to cover the full dynamic range needed to monitor solar activity.

The SXI instrument consists of a telescope assembly and three electronic boxes. The data electronics box (DEB) provides the instrument control, data management, and spacecraft interface. The Power Electronics Box (PEB) provides conditioned power to the entire instrument. Finally, the High Accuracy Sun Sensor (HASS) Electronics Box (HEB) provides precise two dimensional knowledge of the solar aspect with respect to the instrument line-of-sight at image integration time. The SXI telescope, along with other solar observing sensors, is mounted on an instrument mounting platform (IMP). Associated electronics boxes are on the solar array yoke of the GOES-N/P spacecraft, as shown in Figure 6-1. An SXI performance summary is given in Table 6-1. Further disturbance analysis given by Lemen et al (SPIE: Solar X-Ray Imager for GOES August 2003).

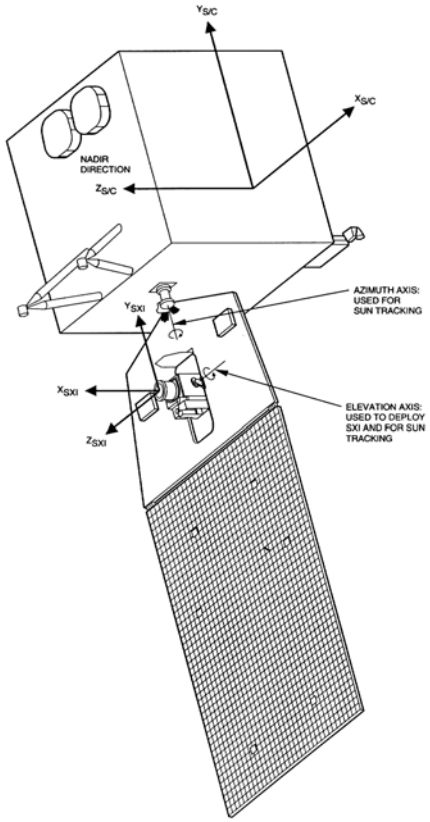

Figure 6-1. Solar X-ray Imager and Solar Array in Deployed Configuration

Copyright © 2006 Boeing. Unpublished work – all rights reserved
Pursuant to Contract NAS5-98069

Table 6-1. Solar X-ray Imager Performance Summary

SXI Parameter		*Performance*	
Imaging exposure times			
Solar flare sites		<10 ms	
Active regions		<100 ms	
Coronal loops		<1 sec	
Coronal hole boundaries		<10 sec	
Spacecraft SXI boresight pointing (to center of solar disk)		Within 3 arc minute elevation, within 3.5 arc minute azimuth	
Field of view		42 by 42 arc minute	
Pixel size		5 by 5 arc second, square pixels	
Spectral sensitivity (integration time 100 ms)			
Spectral band	Source	Minimum detectable photon radiance incident on the telescope entrance (photon cm^{-2} arc $second^{-2}$ sec^{-1})	
6 to 20 Å	Cu (13.3 Å)	85	
6 to 60 Å	C (44.7 Å)	132	
Dynamic range		1000 when measured with monochromatic illumination at 44.7 Å	
Telemetry amplitude digitization		12 bits (linear or logarithmic channels)	
Enpixeled energy		13.3 Å (Cu)	44.7 Å
On axis		26%	29%
10 arc minutes off axis		27%	32%
20 arc minutes off axis		52%	52%
Resolution (on axis)		7 arc seconds (full width half max)	
SXI on-orbit useful life		3 years with a goal of 5 years (after 5 years ground storage)	

Remote Sensing the Solar Corona

The GOES Solar X-ray Imager (SXI) will provide critical information for forecasting space weather events. These events originate in the outer atmosphere of the sun and propagate through the interplanetary medium where they may intersect earth's space environment. Like all atmospheres, the sun's has a temperature and density profile. The level that we see in visible wavelengths we call the photosphere, which is the effective 'surface' of the sun. The temperature of the photosphere is about 6000 K. Density decreases rapidly through the overlying chromosphere. Above the chromosphere is the corona (Figure 6-2), where temperatures rapidly climb to more than 10^6 K. This is where all the 'action' happens that affects earth, and most of the emission at these temperatures is in X-rays. Figure 6-3 shows the spectrum of several coronal features along with the spectral response of the SXI with various filters.

Copyright © 2006 Boeing. Unpublished work – all rights reserved
Pursuant to Contract NAS5-98069

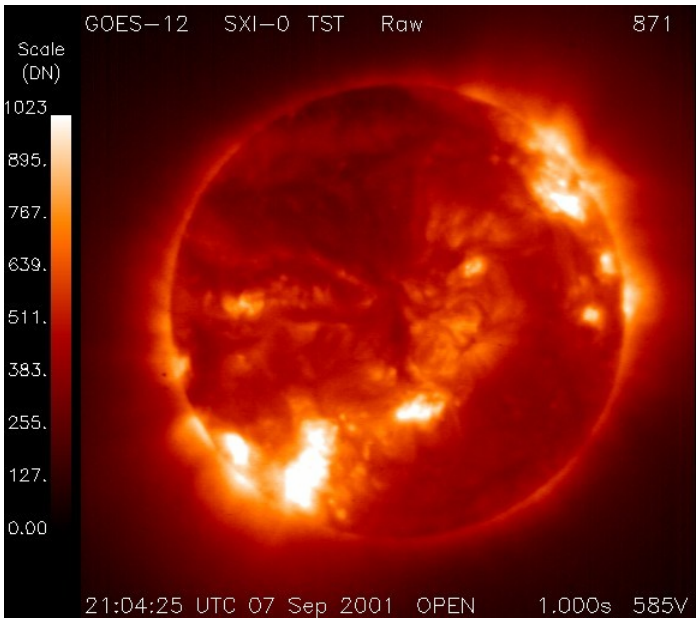

Figure 6-2. SXI Product Showing the Solar Corona (image courtesy Yohkoh)

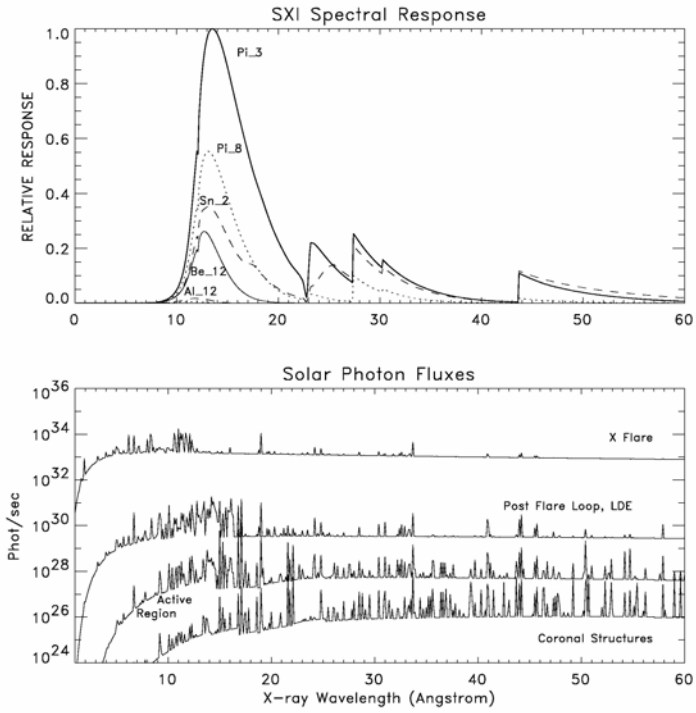

Figure 6-3. SXI Spectral Response Compared to Solar Emission

Copyright © 2006 Boeing. Unpublished work – all rights reserved
Pursuant to Contract NAS5-98069

Instrument System

The SXI is coaligned on the IMP with the combined X-ray Sensor and Extreme Ultraviolet Radiometer (XRS/EUV) and Precision Sun Sensor (PSS). The IMP is mounted to the X-ray positioner (XRP). The complete assembly including the XRP is called the XRS/EUV/SXI assembly, as shown in Figure 6-4. The XRP is attached to the solar array yoke in order to face the sun continuously.

The XRP is a single-axis gimbal aligned in the north-south direction, tracking the sun in solar declination. The solar array drive (SAD) assembly controls the east-west pointing of the yoke, tracking the diurnal motion of the sun. Both the XRP N-S pointing and the yoke E-W pointing are controlled during routine observations by spacecraft-provided closed-loop control systems utilizing the two-axes of the PSS as aspect sensors. Pointing adjustments to the XRP and SAD to correct for small misalignments of the PSS relative to the SXI and XRS/EUV are possible through ground command.

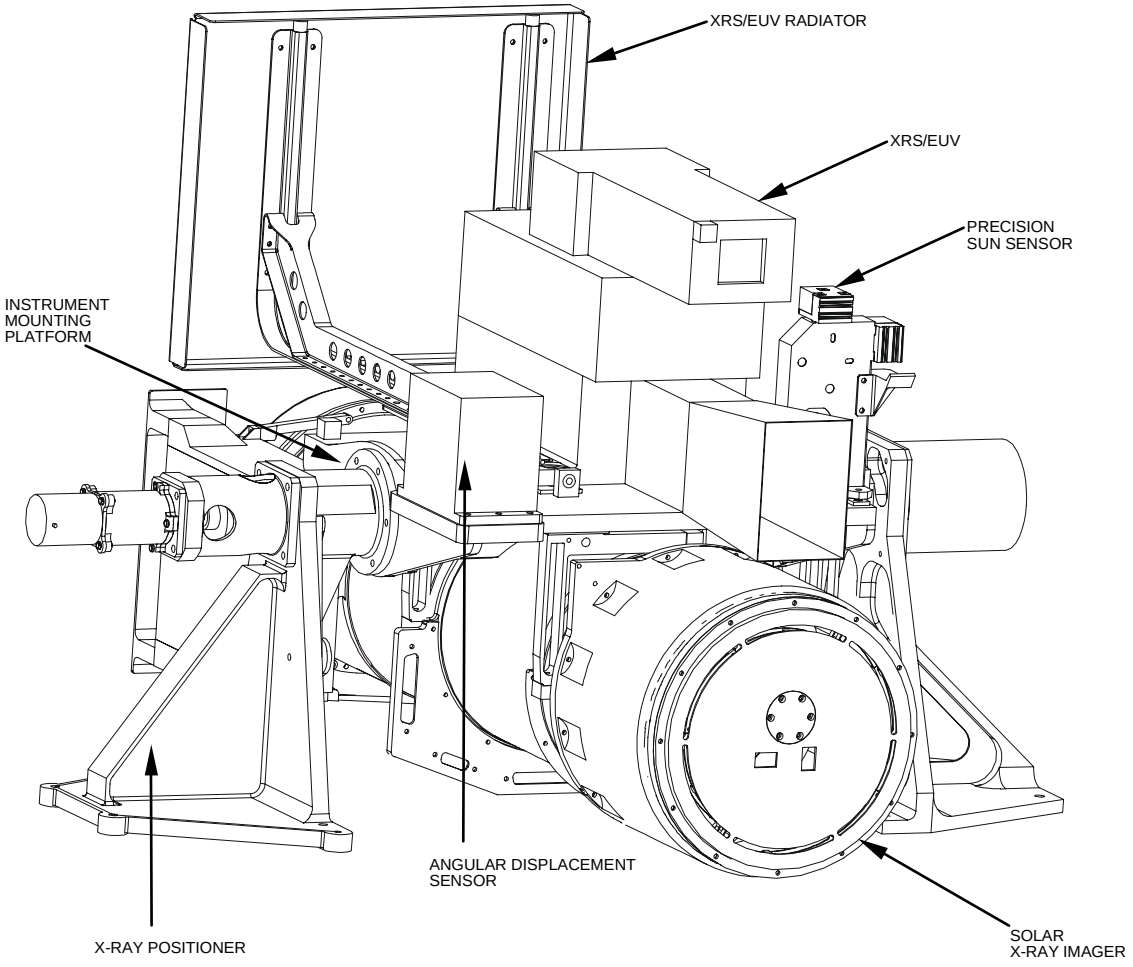

Figure 6-4. XRS/EUV/SXI Assembly Without Harness and Blankets

Copyright © 2006 Boeing. Unpublished work – all rights reserved
Pursuant to Contract NAS5-98069

Actuators for the control loops that track the sun are stepper motors with steps of about 25 arc seconds, or 5 SXI image pixels, in either axis. The annual cycle of solar declination is so slow that N-S stepping is not a concern for blurring the image during integration by the Charge Coupled Device (CCD). However, tracking the 15 arc seconds per second E-W diurnal drift requires an average of one such step each 1.66 seconds. Programmable image integration times of several seconds are required to achieve the desired signal in the CCD camera. Without an approach to pointing stabilization, the situation would be comparable to jerking a 35 mm camera in the middle of a timed exposure, i.e. a multiple exposure. To avoid such image degradation, the solar array stepping is interrupted for 20 seconds for each programmed exposure. The interruption starts 10 seconds before the start of image integration to allow for transient motions to decay. There then remains a stable period of up to 10 seconds for image integration before the solar array stepping is resumed.

When the solar array stepping is interrupted, the solar panel rotates with the spacecraft at the average rate of one rotation per day, or 15 arc seconds per second. This constant rate motion of the telescope during the exposure produces an unacceptably smeared image. To eliminate this effect, the HASS E-W axis data are used to step the image being integrated in the CCD synchronously with the motion of the focused image formed by the telescope mirror. This is analogous to sliding the film under the lens system of the 35 mm camera to produce a sharply focused image of a moving target. The image in the CCD can be stepped in increments of 1/3 SXI pixel, or 1.66 arc second. (See Gantner et al (SPIE: A System to Reduce Jitter for GOES-N-O-P Solar X-Ray Imagers.)

The total mass of the SXI (telescope and electronics) is 27.0 kg, of which 14.1 kg is the telescope assembly. Electrical connections to the GOES spacecraft cross the SAD interface through slip rings. Thirty-one signal rings and two power rings have been allocated to the SXI. The SXI science and housekeeping data are interfaced to the multiuse data link (MDL) in the GOES spacecraft. This MDL is capable of handling a SXI data rate of 100 kbps. The X-ray image data are transmitted from the spacecraft at a rate of approximately 1.5 images per minute. A limited amount of SXI health and safety data is provided in the pulse code modulated (PCM) data stream.

Operation

Operation of the SXI is controlled through the Data Electronics Box (DEB) via a RAD6000 microprocessor operating at 20 MHz. The microprocessor receives and interprets uplinked commands, controls the image sequencing, processes image data, controls interface peripherals, downlinks image and housekeeping data, and keeps the internal time to a resolution of better than 1 ms, as shown in Figure 6-5.

A watchdog timer provides closed-loop recovery from single event upset (SEU)-induced errors or other anomalous conditions that may cause the instrument to enter an undesirable state. Flight software periodically strobes the watchdog timer, resetting the count, as a method of indicating continued health and functionality.

Copyright © 2006 Boeing. Unpublished work – all rights reserved
Pursuant to Contract NAS5-98069

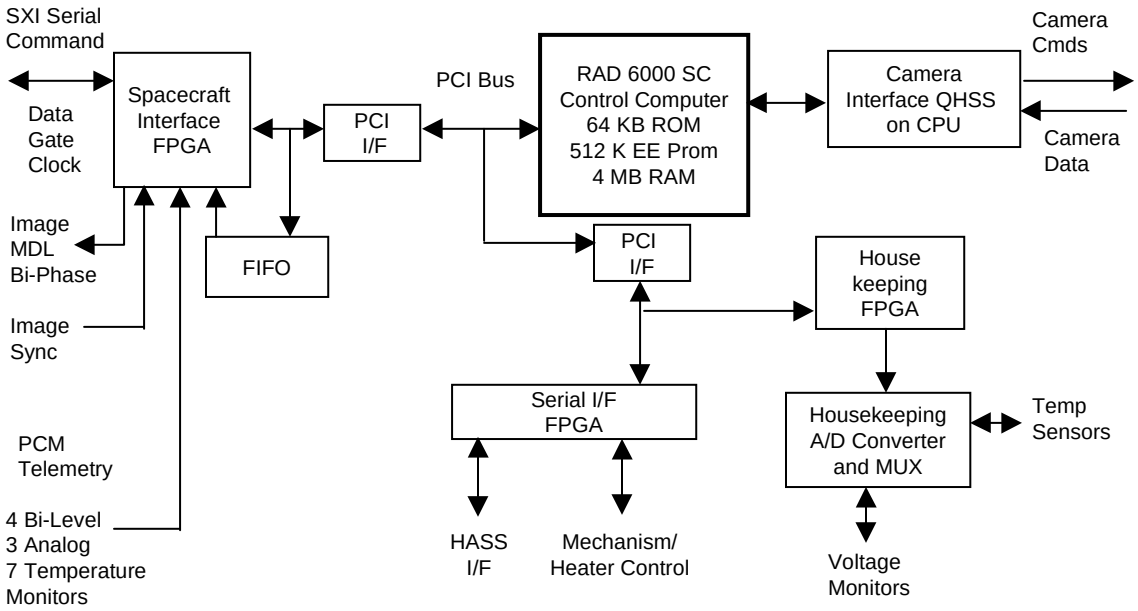

Figure 6-5. Functional Flow Diagram of SXI Microprocessor and DEB

The microprocessor controls the acquisition of image data, as well as the processing of data and transmission to the ground, and is shown in Figure 6-6. Based on tables stored in EPROM or uplinked into Random Access Memory (RAM), the processor generates commands to the camera electronics. The camera electronics only requires the receipt of configuration setup data, then autonomously takes an exposure. The camera has an internal oscillator and state-machine designed to reduce the load on the CPU. After a programmed exposure, the 512x512 image is read out line-by-line into redundant A or B channel amplifiers. The data is then converted to a 12 bit word, which is read out at 50K pixels/second and transferred to the Data Electronics Box.

The Camera Electronics Block develops the data from the CCD. The data are routed through two amplifiers (A and B) to provide correlated double sampling (CDS). CDS removes some noise in the CCD signal due to the uncertainty in the amount of charge remaining on the capacitor following a reset. The Data Electronics Interface Board combines the CCD image data, housekeeping, HASS pointing data, and memory dump data, and passes them to the spacecraft via the DEB interface board. SXI data are transmitted to ground by two paths, slow-speed telemetry (for housekeeping data), and via the MDL for the 100 kbps Image Data. The Telemetry Control Field Programmable Gate Array (FPGA) takes the packets received and formats them into CCSDS transfer frames, sending them out through the Bi-Phase Level (Manchester encoded) MDL interface to the spacecraft. The 26C31 MDL interface drivers are hot redundant going to two different Boeing Instrument Remote Telemetry and Command Units (IRTCU).

Copyright © 2006 Boeing. Unpublished work – all rights reserved
Pursuant to Contract NAS5-98069

The data can be received at SOCC (Flight Operations) in Suitland, MD and the NOAA Space Environment Center (SEC) in Boulder, CO. In general, image data are downlinked as rapidly as possible after they are acquired.

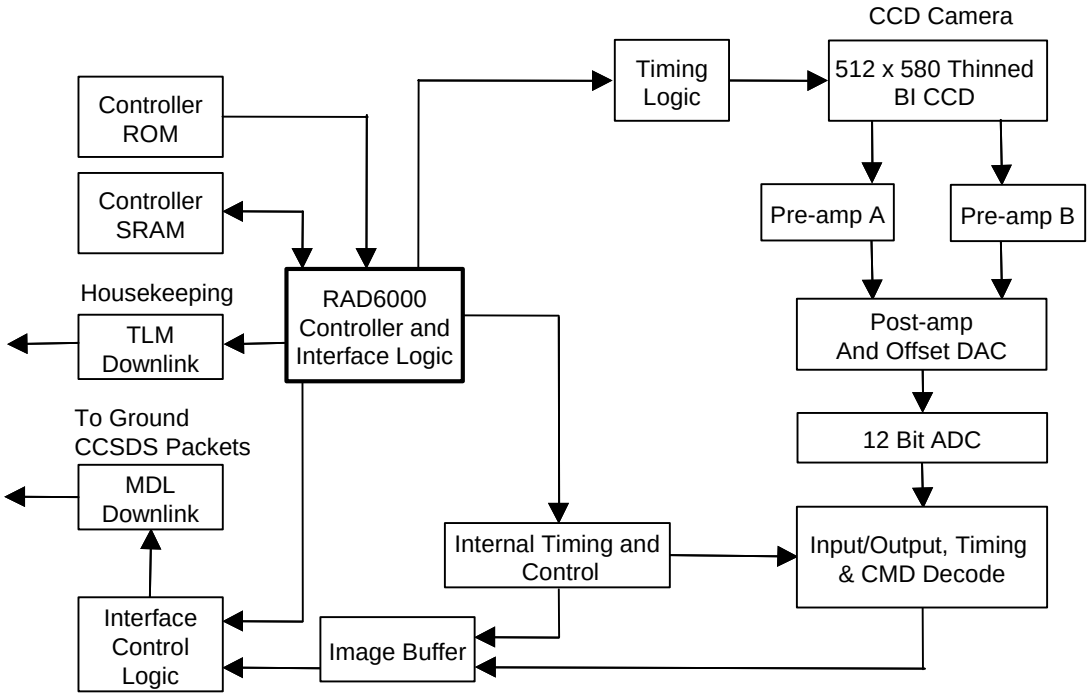

Figure 6-6. SXI Control System Logical Flow Diagram

Power

Electrical power is provided to the SXI via the power electronics module from the spacecraft +42 volt electrical power subsystem. The electrical interfaces to the spacecraft connect via slip rings across the yoke gimbals. The power required by the SXI is 60 Watts in daylight. The spacecraft provides power to the SXI instrument from the secondary bus that is regulated at 42.0 ± 0.5 V dc during sunlight operation. During eclipse, this primary power bus is controlled by battery voltage and a voltage regulator, which maintains the +42 volt bus. All SXI electronic power comes from this supply. The spacecraft primary bus (53 volt IPC) provides survival/standby heater power to the SXI. This power is protected with fuses within the spacecraft. The input power consumption by the SXI is:

- Sunlight: 60 Watts maximum from the 42 volt bus
- Eclipse: 80 Watts power, during operational, eclipse mode

Telescope Assembly

The telescope design consists of three basic groups: objective group, metering tube group, and focal plane group. The SXI telescope assembly is shown in Figure 6-7. Main

Copyright © 2006 Boeing. Unpublished work – all rights reserved
Pursuant to Contract NAS5-98069

components of the objective group are a hyperboloid-hyperboloid grazing incidence X-Ray mirror, entrance filters, the HASS, and a mirror mounting structure. The metering tube group consists of a metering tube and its mount. The focal plane group components are a CCD detector, filter wheel assembly, and CCD radiator.

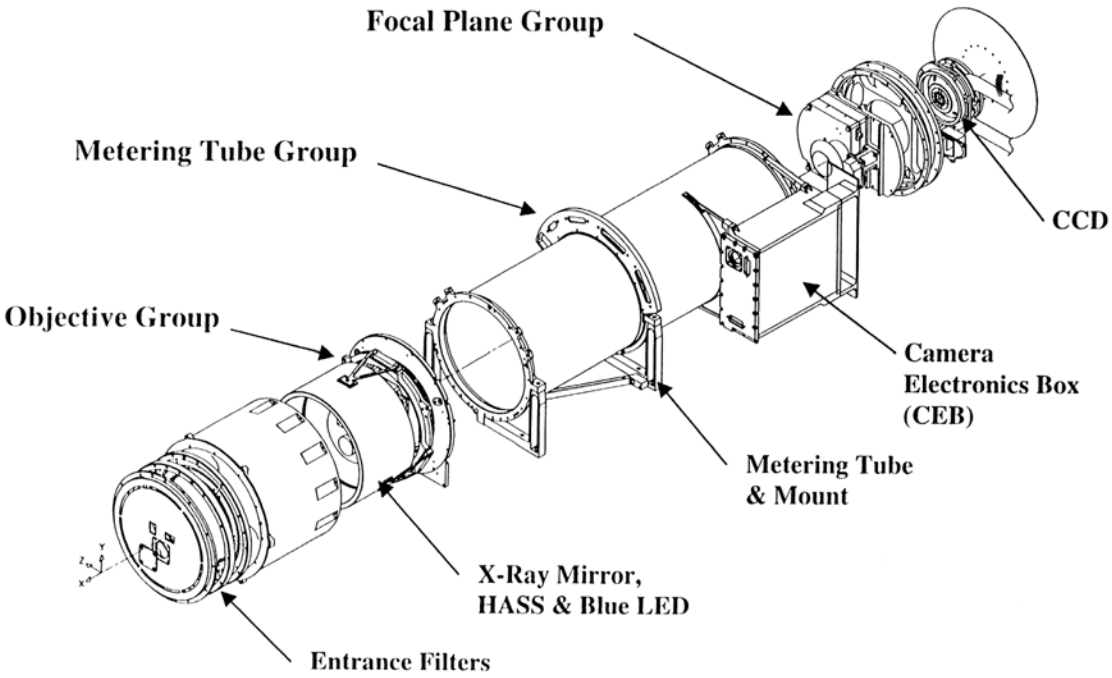

Figure 6-7. SXI Telescope Assembly

Objective Group

- *Entrance Filter.* The entrance filter blocks solar ultraviolet, visible, and infrared radiation from the interior of the telescope, greatly reducing any contaminating signal originating outside the soft X-ray band. The filter is composed of a sandwich of aluminum, titanium, and polyimide. The sun-facing layer is aluminum about 1100 Å thick, which is the primary rejection element. Aluminum has a transmission window between 200-800 Å, but titanium is strongly absorbing in this region. A titanium layer 600 Å thick is therefore used to suppress the very strong He 304 Å chromospheric line that falls in this band. The 4000 Å thick polyimide substrate provides the strength needed to survive the launch loads.
- *Mirror.* The mirror design consists of a grazing incidence mirror in hyperboloid-hyperboloid configuration (see: Patrick Thompson and James Harvey in Optical Engineering, Volume 39,1677-1691 (2000). Both optical surfaces are fabricated from a single Zerodur element. The mirror is supported by six equally spaced titanium flexures bonded to super Invar pads, which are in turn bonded to the mirror. The flexures mate to a mounting ring attached to the optical bench. Nominal mirror parameters are given in Table 6-2.

Copyright © 2006 Boeing. Unpublished work – all rights reserved
Pursuant to Contract NAS5-98069

- *High Accuracy Sun Sensor (HASS)*. The pointing resolution required of the HASS by the SXI is 1.66 arc second. The HASS consists of a sun sensor head and a sun sensor electronics box. Various reticules and associated solar cells form the sensor head. The electronics package provides a FPGA and multiplexed processors for the coarse and fine sun data and for detecting sun presence. The sun angle output signals are passed through shift registers. The HASS output to the data electronics box is digital. Serial data interface circuits and control circuits provide command capability. The HASS provides pointing knowledge, which enhances on-board corrections for other pointing errors (e.g., jitter during exposures or "static" E-W pointing errors). This knowledge is used to reduce the effect of solar motion across the CCD camera. HASS features are given in Table 6-3.

Table 6-2. Nominal Mirror Parameters

Optical Design	*Hyperboloid-hyperboloid (Harvey-Thompson #17)*
Radius at principal plane	80 mm
Axial length of the primary and secondary	47.5 mm
Joint focal length	655 mm
Mirror mass	1.7 kg
Mirror material	Zerodur
Surface coating	None
Geometrical area	726 mm^2

Table 6-3. HASS Features

Field of view	±1.8° square
Resolution	1.66 arc second (each axis)
Sampling rate	32 Hz
Stray light rejection	>10.5° from optical axis
Power	0.63 watts
Mass	
– Sensor head	0.65 kg
– Electronics	1.8 kg

Metering Tube Group

The metering tube group or optical bench is both a metering structure for the optical system and a structural support member for the telescope assembly. As a metering structure, the optical bench maintains the separation between the mirror and the focal plane subassembly to ±10 microns over a temperature range of ±40°C. The tube is hand laid using sheets of carbon fibers impregnated with a cyanate ester resin. The bench material is highly hydrophobic and thermally stable thereby avoiding water vapor

Copyright © 2006 Boeing. Unpublished work – all rights reserved
Pursuant to Contract NAS5-98069

outgassing and possible condensation on the detector. The CCD camera electronics box is mounted on the outside of the metering tube.

Focal Plane Group

The focal plane group design incorporates three components: a mechanical shutter, two filter wheels and a CCD detector. These are all located in a single enclosure to minimize stray light effects.

The shutter enables exposure times from 1 ms to 10 seconds or greater. There are two independently controlled filter wheels, one behind another, each with six filter positions.

The CCD has an array of 512 x 580 16-micrometer pixels, each with a 5 arc second instantaneous field of view. The CCD is backside illuminated to allow detection of soft X-rays (>60 Å) and thinned to a thickness of about 9 micrometers. The CCD has a full well of over 150,000 electrons and incorporates an anti-blooming drain to minimize the impact of very bright sources in the image on normal signals. The CCD is mounted in a package made of Wolfmet, a material that closely matches the coefficient of expansion of the detector.

The CCD operating temperature is nominally between -30° to -60°C, and has negligible dark current and read noise. It has a wavelength dependent quantum efficiency greater than 0.6 and often above 0.8. Soft X-rays at 44.7 Å generate about 75 electrons per photon detected and harder X-rays at 13.3 Å generate about 255 electrons per photon detected.

A blue Light Emitting Diode in the objective group of the SXI can be used to illuminate the CCD for "aliveness" and functional tests as well as provide some "Flat Field" information.

Spectral Filtering

Two filter wheels having 6 positions each are located in series along the optical axis to provide broadband spectral filtering. Each wheel has one open position with no filter so that the remaining positions can be used individually. Nine of the 10 remaining positions are used for spectral analysis of the sun and contain six unique filter types (3 are redundant to make 9 total). One position on wheel 1 contains a clear glass element to evaluate scattered white light within the instrument. The filter types and positions are summarized in Tables 6-4 and 6-5.

The properties of the six unique analysis filters allow the imaging of different types of coronal features as well as the extraction of temperature information. The filter system is designed to minimize the effect on the image of any non-uniformity in the filter materials. The filters are sized so as to not obstruct or vignette the field of view. The filter wheel position is determined by the image sequence commanded by the ground. The various wavebands are selectable by the filters in conjunction with the other components contributing to the instrument response function (e.g., entrance filter, mirror, and detector).

Copyright © 2006 Boeing. Unpublished work – all rights reserved
Pursuant to Contract NAS5-98069

Table 6-4. Analysis Filter Assignments within the Filter Wheels

Position	1	2	3	4	5	6
Wheel 1	Open	Be 12	Tin	Glass	Thin Poly	Thick Poly
Wheel 2	BE 50	Al 12	Thin Poly	Open	Tin	Be 12

Table 6-5. Analysis Filter Summary

Filter	Wavelength, Å	Filter Material(s)	Thickness(s), µm
Thin Poly	6–60	poly/AI/Ti	0.30/0.12/0.03
Thick Poly	6–50	poly/Ai/Ti	0.45/0.27/0.18
Tin	6–70	poly/Sn	0.30/0.17
Al 12	6–14	Al	12.00
Be 12	6–20	Be	12.00
Be 50	6–12	Be	50.00

Operational Modes

The SXI operates in two basic modes: safehold and imaging. In addition, when turned off, the SXI still must be temperature controlled using 'survival' heaters. These operational modes are illustrated in Figure 6-8.

SXI Off

The SXI data system is unpowered and the outputs from the SXI dc/dc converters are inhibited. Power is provided for thermostatically controlled heaters from 53 Vdc bus. The temperatures are monitored by the GOES PCM telemetry system during this mode. The spacecraft systems provide the conditioning circuitry, with SXI providing calibrated thermistors. Temperatures monitored in this mode are mirror assembly, CCD assembly, data electronics box, and power electronics box.

Safehold Mode

The SXI defaults to this mode at power-up and no imaging is performed. The safehold mode is used to prepare the instrument to lose power and effects a programmed shutdown of the SXI subsystems. Commands to perform diagnostics and housekeeping are allowed in this mode and housekeeping data is downlinked. Modifications to image and sequence tables are permitted only in this mode. The safehold mode is entered either by ground command or by software if a serious hardware or commanding error is detected.

Copyright © 2006 Boeing. Unpublished work – all rights reserved
Pursuant to Contract NAS5-98069

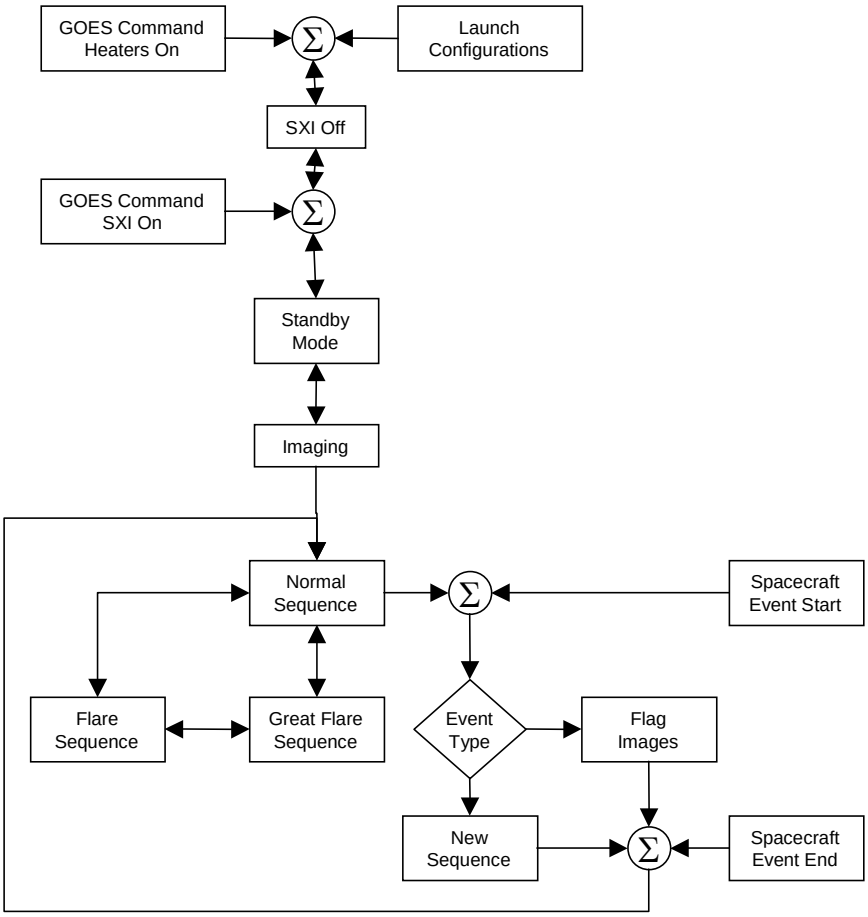

Figure 6-8. SXI Operational Modes Flow Diagram

Imaging Mode

This is the operational mode for the SXI. This mode may be entered only by ground command. In this mode the SXI can:

- Image the sun
- Take blue LED image for diagnostic purposes
- Take background flux images (shutter closed)

When in imaging mode there is significant capacity for autonomous sequence control and reaction to external events. For instance, the SXI can be set to recognize solar flares (or 'great flares') and transition into special image sequences. In addition, the SXI can react to spacecraft events, when appropriately informed, to either flag the images or change to a different sequence.

The normal controls for taking sequences of images exist as a set of stored tables representing filter type, exposure, etc. A particular image is described by its Frame

Copyright © 2006 Boeing. Unpublished work – all rights reserved
Pursuant to Contract NAS5-98069

Definition Block (FDB). A framelist is a sequence of FDBs to be executed in order. Sequence control selects a set of framelists to execute in parallel with priority based conflict resolution.

Ground Processing

GOES will downlink SXI images at a 40-60 second cadence on the MDL directly to NOAA's Space Environment Center (SEC) in Boulder, Colorado. SEC will process the data in real time for its use and for other collaborating agencies in predicting space weather. To meet this need, SEC corrects for known image defects, calibrates, and stores each image. Then, it processes the images to display on real time monitors, automatically locate flares, produce movie sequences, calculate coronal hole, boundaries and produce products for the general public. Further details and information on the processing at the SEC is available at http://www.sec.noaa.gov/sxi/index.html.

The general user will be able to view or browse the MPEG files or order the full - resolution images for research. The products available to the research community are level 0 (raw data), level 1, and level 2 data. The level 1 data will consist of single calibrated images which have had defects removed. Level 2 data will include multiple image products such as difference images, ratio images, wide dynamic range images, and movies. All levels of data will be archived at the NOAA National Geophysical Data Center (NGDC) located at http://www.ngdc.noaa.gov. An overview of the processing stream is shown in Figure 6-9.

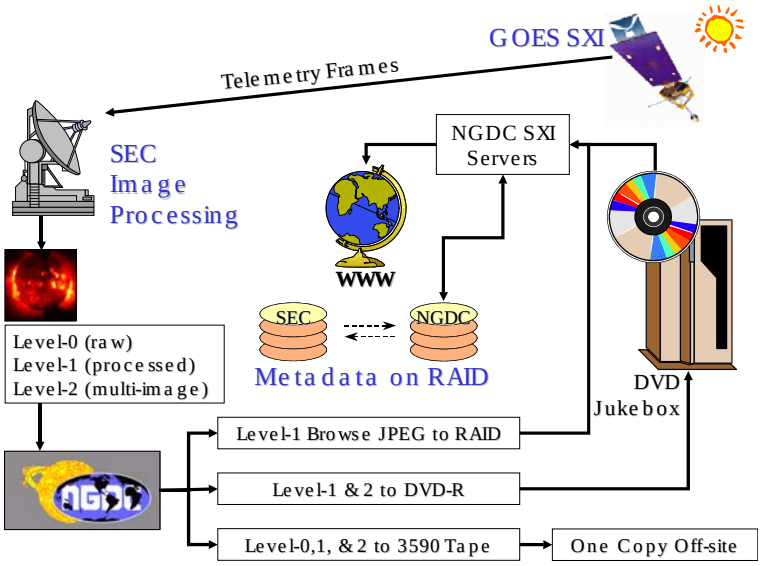

Figure 6-9. Processing Stream Overview

Copyright © 2006 Boeing. Unpublished work – all rights reserved
Pursuant to Contract NAS5-98069